MICROWAVE OVEN (MWO-30)

30 in. 1.6 cu. ft. Built-In Convection Microwave Oven

ZLINE
ATTAINABLE LUXURY®

MWO-30 Stainless Steel

Ceramic Turntable and Reversible Wire Grill Rack Included



Satin Stainless Steel



Black Stainless Steel



GENERAL PROPERTIES

SKUs	MWO-30, MWO-30-SS, MWO-30-BS
Base Finishes	Stainless Steel, Satin Stainless Steel, Black Stainless Steel
Size	30 in.
Capacity	1.6 cu. ft.
Control Type	LCD, Touch Screen
Mount Type	Built-In
Convection Fan	Yes
Open/Close	Manual Door
Start/+30Sec	Yes
Stop/Clear	Yes
Power Level	10 Power Levels
Timer/Clock	Yes
Control Lock	Yes
Certification	UL, DOE, CEC, NRCan

DIMENSIONS AND WEIGHT

Product Dimensions	29 3/4" W x 22 7/8" D x 19 1/8" H
Interior Dimensions	16 1/2" W x 16 1/2" D x 10" H
Cutout Dimensions	28" W x 23 1/8" D x 18 15/16" H
Product Weight	90 lb (41 kg)

FEATURES AND BENEFITS

Convection and Microwave Modes: Convection, broil, and microwave cooking settings to provide optimal dish results.
High-Powered Performance: 10 different power levels and a powerful 1,000-watt cooking power.
Convenient Microwave Settings: Optimal performance for every dish with sensor cooking, reheat, defrost, and rapid preheat settings.
LCD Display: Easy-to-use crystal-clear LCD display and timer.
Reversible Turntable: Durable ceramic turntable provides an even heat distribution and can be turned clockwise or counterclockwise.
Reversible Wire Rack: An included microwave rack offers maximum convection performance; for best results, place face down for baking or roasting and face up for grilling.
1.6 cu. ft. Capacity: A large cooking area will easily fit your items, such as coffee mugs up to 7 in. tall and dishes up to 16 x 16 in.
Stainless Steel Interior: An easy-to-clean stainless steel interior is engineered to provide an efficient and even heat distribution.
Child-Lock Feature: Have complete peace of mind with a microwave lock feature, offering everyday safety in the kitchen.

MICROWAVE PRESETS

Auto Defrost	By Weight or Time
Frozen Foods	Yes
Sensor Cook	Yes
Sensor Reheat	Reheat Dinner Plates or Casseroles (8–16 oz.)
Popcorn	1.2 oz., 2.5 oz., 3.5 oz. Bags of Popcorn
Beverage	Heats 1/2 to 2 cups (4–16 oz.) of a beverage
Pizza	Bake Frozen, Fresh, or Microwaveable Pizzas

OVEN FEATURES

Broil High-Low	Yes
Convection	Yes
Bake	Cakes, Cookies, Pies, Muffins, Rolls, and More
Roast	Poultry, Fish, Vegetables and More

ELECTRICAL REQUIREMENTS

Electrical	120 V / 60 Hz / 20 A (Dedicated Circuit)
Hardwire Compatible	No
Power Cord	60" (1524 mm)
Input Power	1750 W
Output Power	1000 W

WARRANTY

Manufacturing Warranty: 2-year parts

**Appliance protection plans sold separately, contact for more information.*

BASE FINISHES

SATIN STAINLESS STEEL

BLACK STAINLESS STEEL

STAINLESS STEEL

MICROWAVE OVEN (MWO-30)

30 in. 1.6 cu. ft. Built-In Convection Microwave Oven

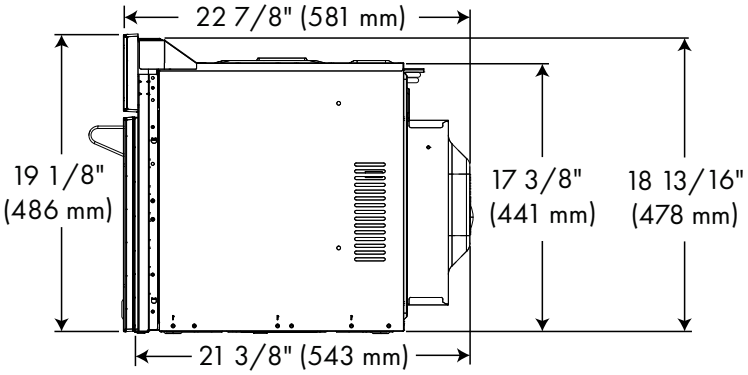

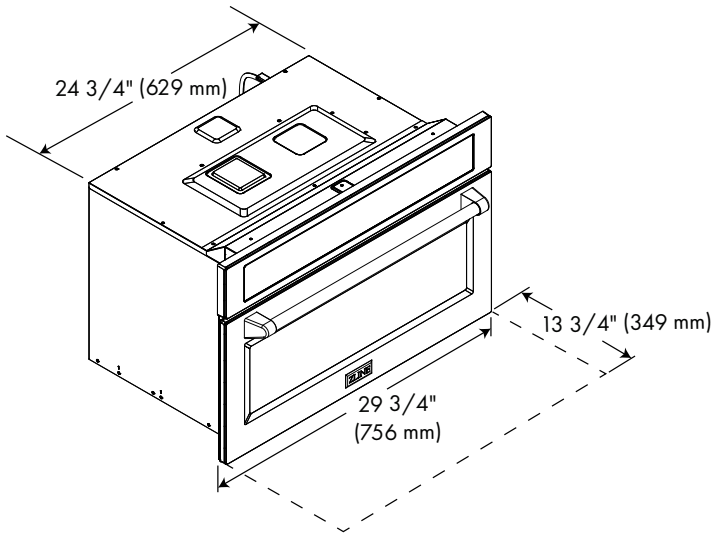

INSTALLATION RESOURCES

Installation / User Manual	Click Here

WALL CABINET

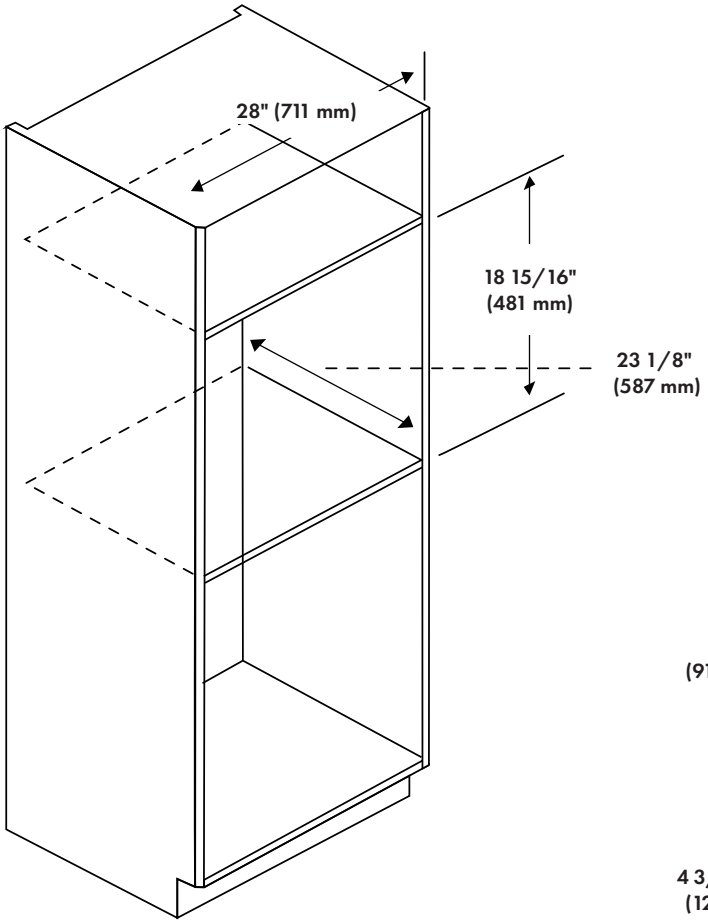

UNDERCOUNTER / ISLAND

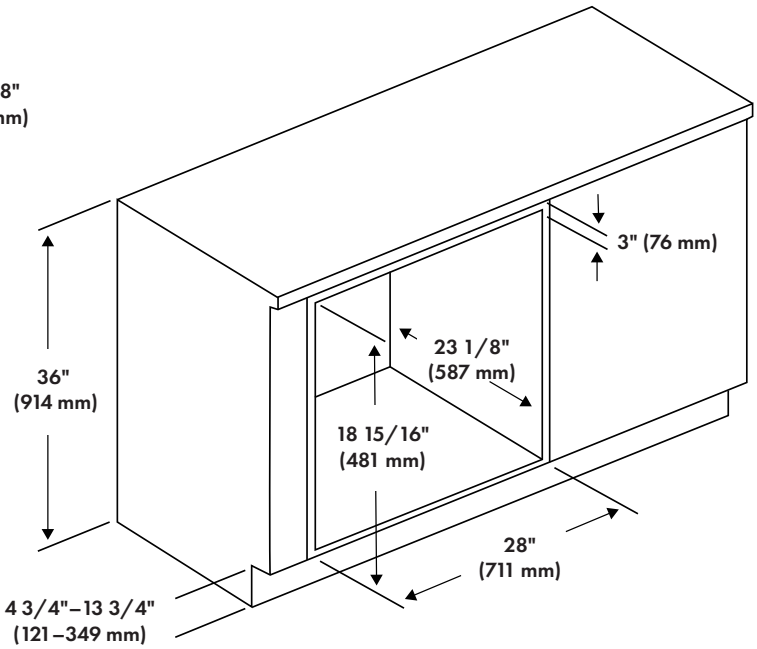

AUTOGRAPH EDITION

Satin Stainless Steel With Matte Black Handle



SATIN STAINLESS STEEL

Polished Gold	MWOZ-30-SS-G
Champagne Bronze	MWOZ-30-SS-CB
Matte Black	MWOZ-30-SS-MB

Stainless Steel With Champagne Bronze Handle



STAINLESS STEEL

Polished Gold	MWOZ-30-G
Champagne Bronze	MWOZ-30-CB
Matte Black	MWOZ-30-MB

Black Stainless Steel With Polished Gold Handle



BLACK STAINLESS STEEL

Polished Gold	MWOZ-30-BS-G
Champagne Bronze	MWOZ-30-BS-CB

AUTOGRAPH ACCENT COLORS



Autograph Edition Includes:
1 Autograph Edition Handle. Autograph Edition Handle Will Ship Separately.







AUTOGRAPH EDITION

Andrew Zuro

Stainless Steel With Helix Polished Nickel Handle



STAINLESS STEEL

Polished Gold	MWOZ-30-KG
Champagne Bronze	MWOZ-30-KCB
Polished Nickel	MWOZ-30-KPN

Black Stainless Steel With Helix Polished Gold Handle



BLACK STAINLESS STEEL

Polished Gold	MWOZ-30-BS-KG
Champagne Bronze	MWOZ-30-BS-KCB

HELIX AUTOGRAPH COLORS

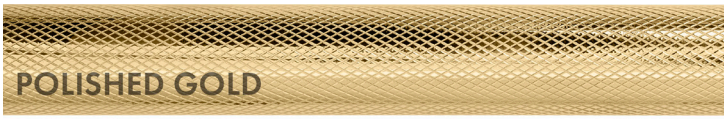



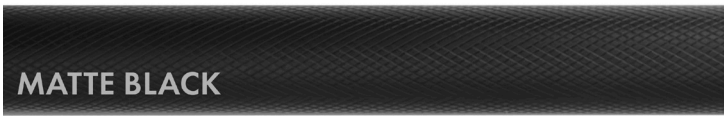

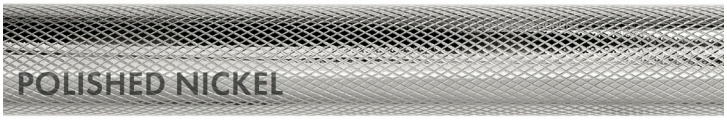

AUTOGRAPH HELIX HANDLE (SET OF 1)

Polished Gold Helix Handle	MWHZ-30-K-G
Champagne Bronze Helix Handle	MWHZ-30-K-CB
Matte Black Helix Handle	MWHZ-30-K-MB
Polished Nickel Helix Handle	MWHZ-30-K-PN

STANDARD HELIX HANDLE SET (SET OF 1)

Black Stainless Steel Helix Handle	MWHZ-30-K-BS
Stainless Steel Helix Handle	MWHZ-30-K-ST

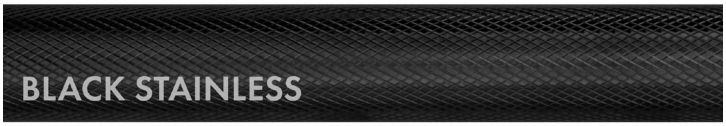

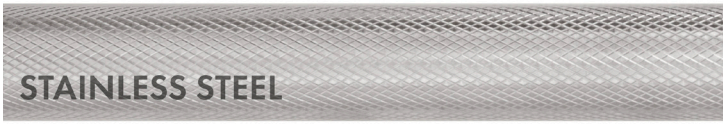

Note: Standard Helix color finishes are not included in Helix Autograph Edition bundle SKUs. Compatible Helix handles are sold separately.

CONTACT INFORMATION

PHONE

Customer Service
1-614-777-5004

Dealer Assistance
1-833-597-2461

HOURS OF OPERATION

Customer Service
Monday–Friday 6:00am–4:30pm CST

Dealer Assistance
Monday–Friday 7:00am–4:00pm CST

EMAIL

Customer Service
contact@zlinekitchen.com

Dealer Assistance
dealer@zlinekitchen.com

© 2026 ZLINE Kitchen and Bath, LLC. All rights reserved. ZLINE reserves the right to make changes at any time to its products, designs, specifications and/or features without notice. No part of this document may be reproduced, distributed, or used in any form without the express written permission of ZLINE.