WALL-MOUNT RANGE HOOD

TWISTER BBQ

SIZE: **36" | 42" | 48"**

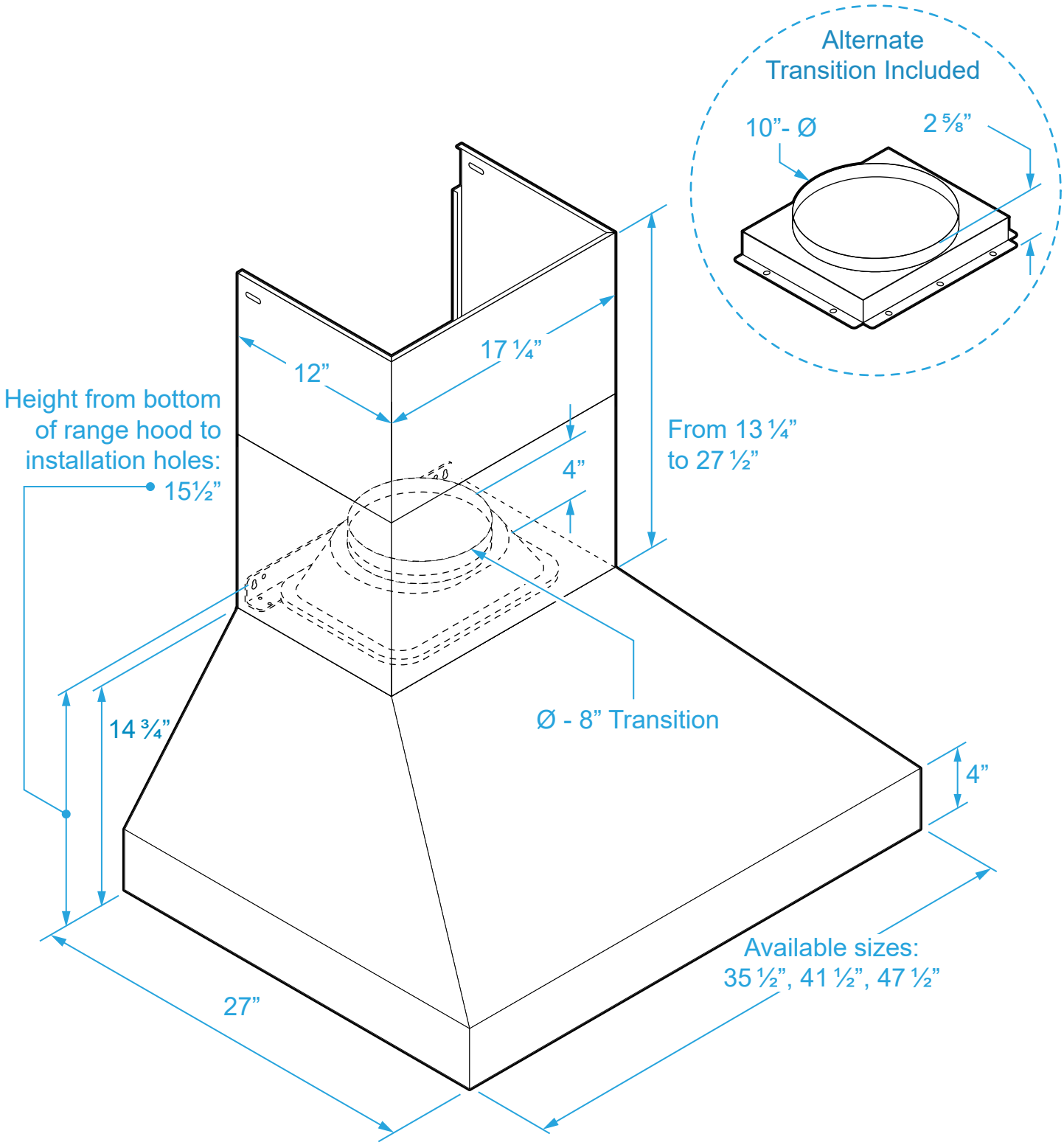

VICTORY RANGE HOODS